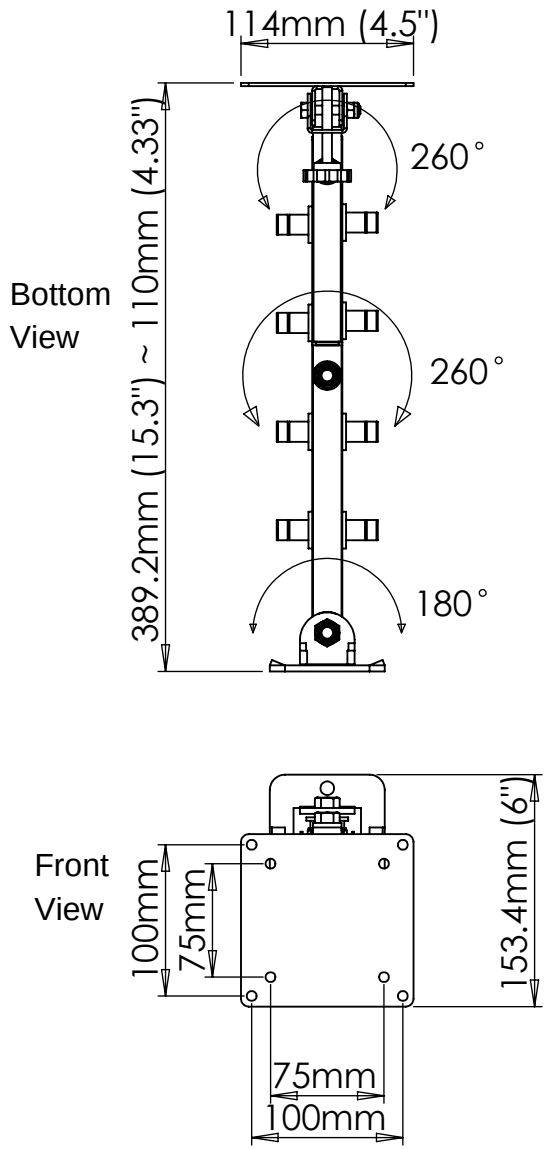

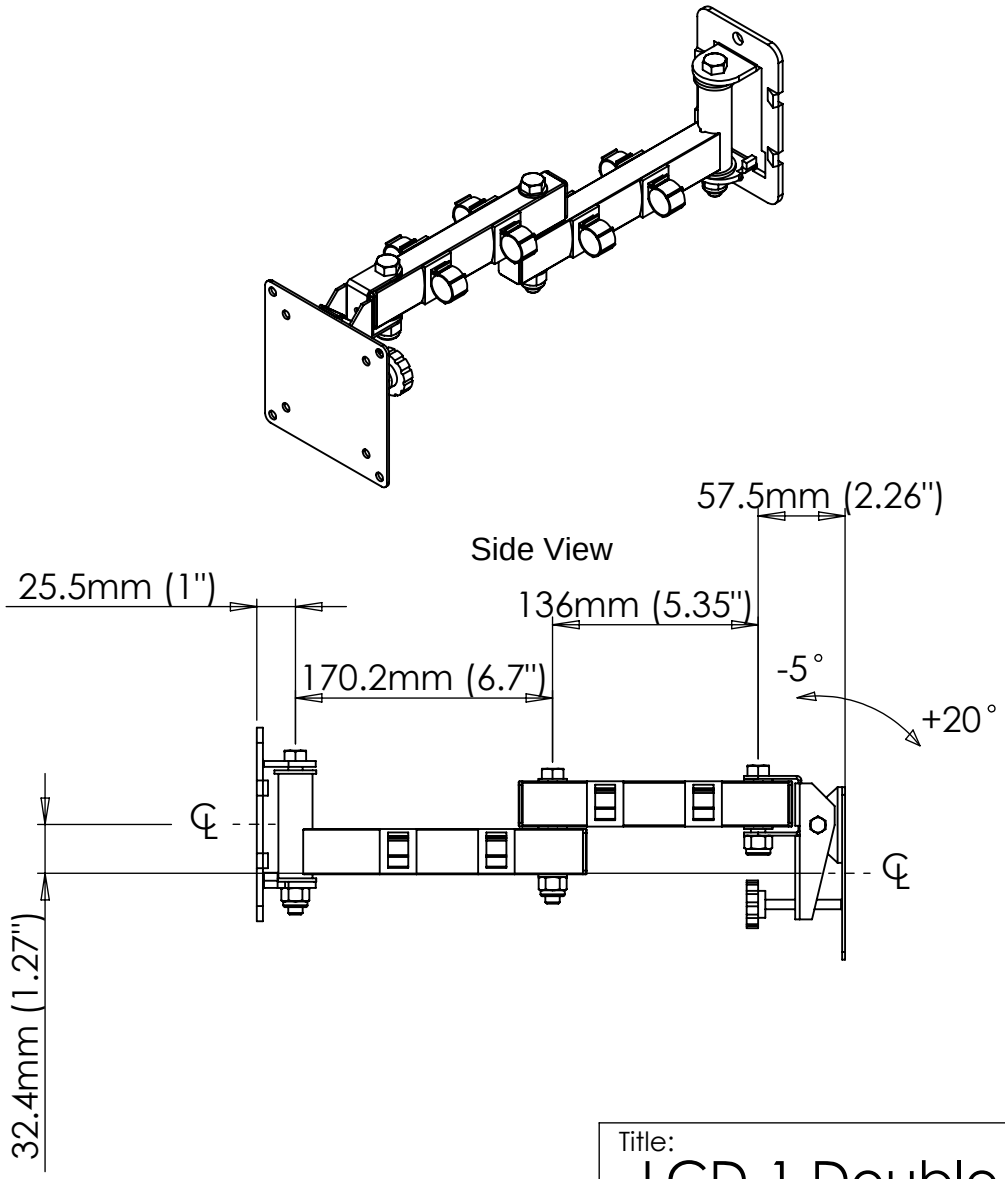

VIDEO MOUNT PRODUCTS

Title:
LCD-1 Double Arm

SIZE	DWG. NO.	REV
A		

SCALE: 1:5	Unit: mm	SHEET 1 OF 3

5 4 3 2 1

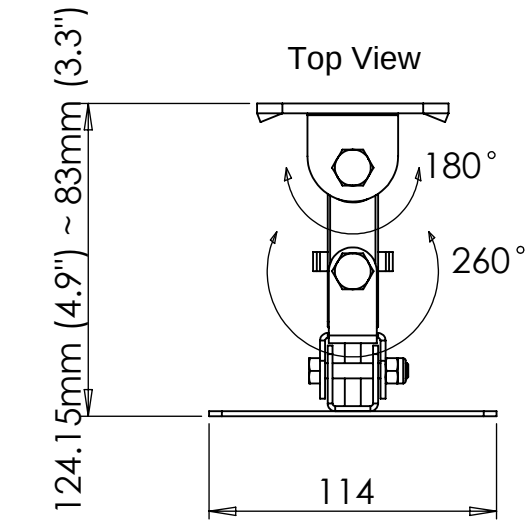

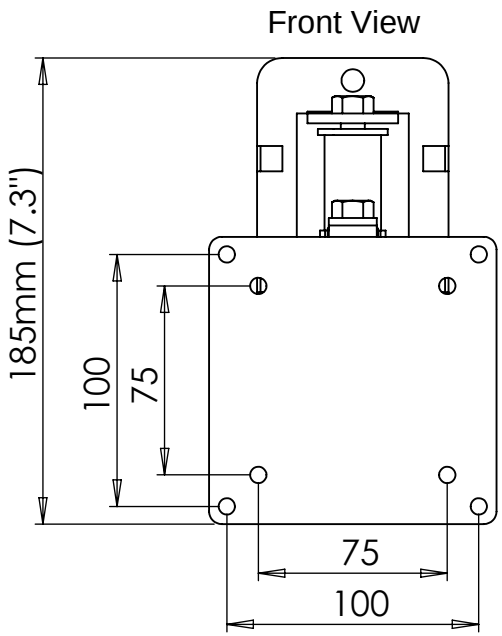

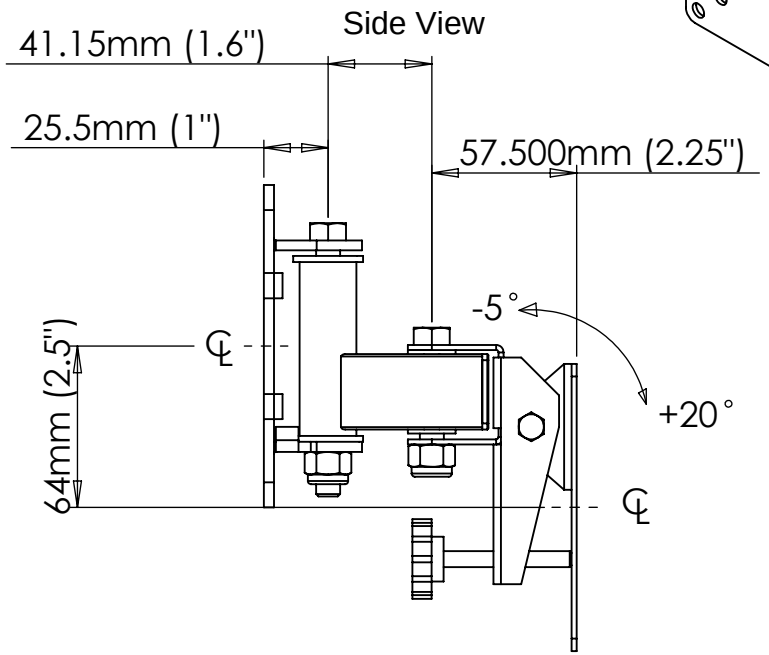

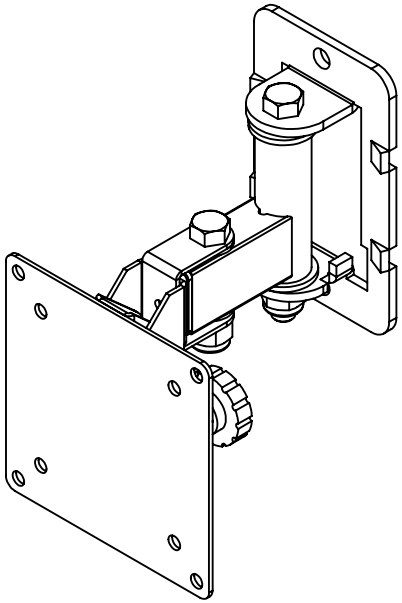

VIDEO MOUNT PRODUCTS

Title:

LCD-1 Stub Arm

SIZE	DWG. NO.	REV
A		

SCALE: 1:3	Unit: mm	SHEET 2 OF 3

5 4 3 2 1

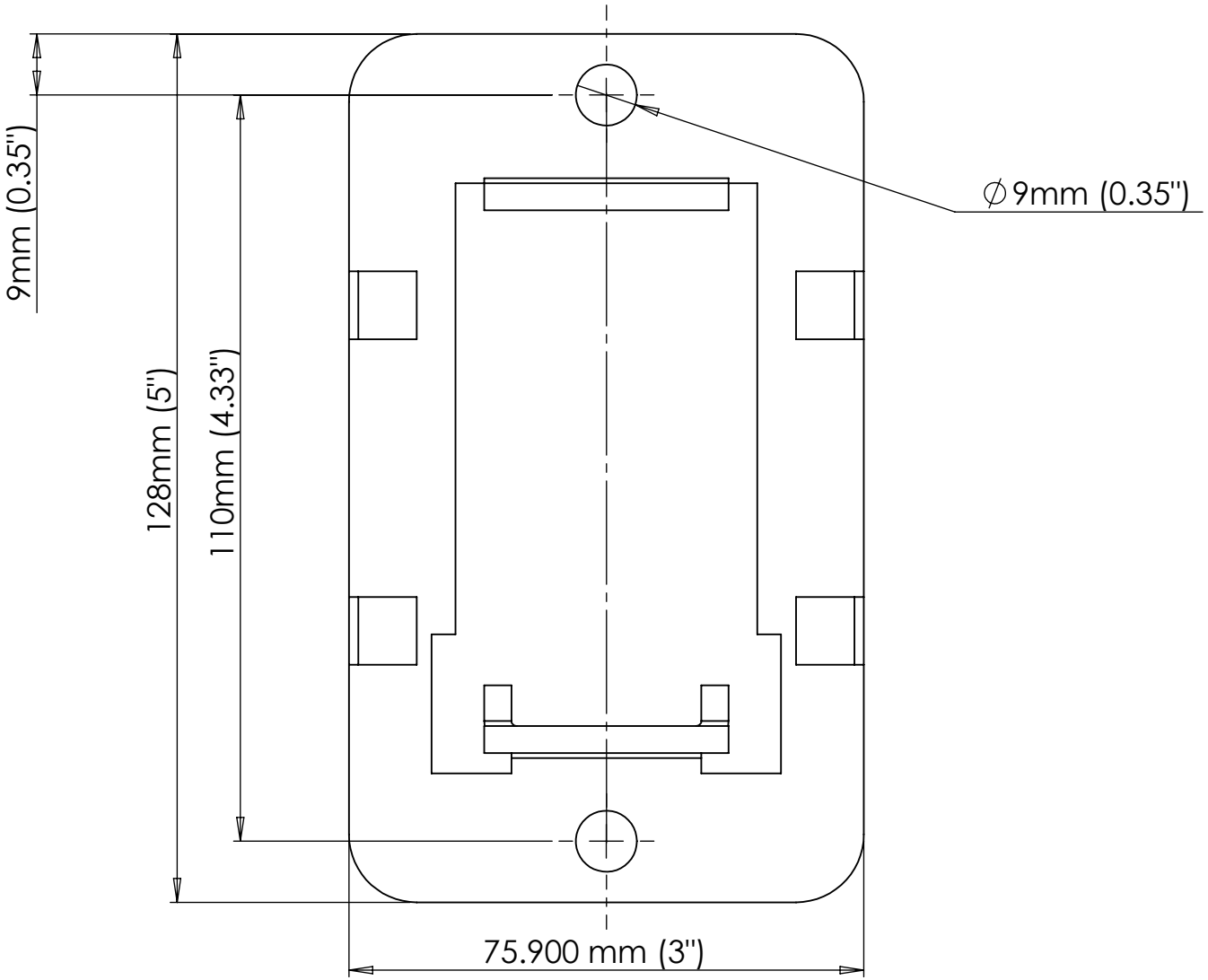

Wall Plate

VIDEO MOUNT PRODUCTS

Title:

LCD-1 Wall Plate

SIZE	DWG. NO.	REV
A		

SCALE: 1:1	Unit: mm	SHEET 3 OF 3

5 4 3 2 1